CITROEN CARS LIMITED,
TRADING ESTATE,
SLOUGH, BUCKS.
ENGLAND.

Technical Note 52D (A)
(Supplement No.1)

Technical Note 54D
(Supplement No.2)

March 1966

1. Engine Oil Capacities, DS.21 and DS19A, Safari 21, Safari 19
2. Wheel Nuts, DS.21, DS19A, ID19 all types and Safari.
3. Tappet Clearances, DS.21, DS19A, Safari 21, Safari 19.

1. The Engine Oil capacity of the DS.21 (2175-cc) and of the DS19A (1985-cc) engine is now defined as:-

8 pints ($4\frac{1}{2}$ litres) after draining and refilling only;
9 pints (5 litres) after oil filter change or after stripping and re-assembling the engine.

Please ensure that your copy of Technical Note 54D (300-mile Service) and other ducuments on which these figures appear, indicate these quantities.

2. The tightening torque for the wheel nuts of all these models with 5-stud wheel fixings, is now defined as:-

43 ft. lbs. (6 m.kg) to 58 ft. lbs. (8 m.kg).

Please ensure that your copy of Technical Note 54D and any other documents on which these figures appear, indicate these torques.

3. The tappet clearances on the 2175-cc and 1985-cc engines of the DS.21, DS.19A, Safari 21 and Safari 19, which are:-

Inlet	0.20 mm (0.008")
Exhaust	0.25 mm (0.010")

are to be set with the ENGINE HOT.

Please ensure that your copies of Technical Note 52D (in the table on Page 2) and Technical Note 54D (Page 3, Para.5) and any other documents in which this adjustment is mentioned, indicate this condition. (N.B. the 1911-cc ID engine tappet clearance adjustment continues to be carried out with the engine cold).

4. The information above applies to these vehicles as from their introduction in 1965.

Société Anonyme
ANDRÉ CITROËN
Capital : 302.460.000 Francs
117 à 167, Quai André Citroën
PARIS XVe

MÉTHODES RÉPARATIONS

I D 19

Model 1966

Three-Hundred Miles Service Operations

Since September 1965, ID 19 vehicles have been modified as follows :

1 - ENGINE :

- Power ouptut of 81 bhp - SAE is developed at 4,750 rpm.
- Max. torque is 103 foot-pounds (14.3 m.kg.) SAE at 3,500 rpm.
- Compression ratio is 8 to 1 (increased by the fitting of bulged pistons head.) This permits the use of regular petrol.
- The Solex 32 SDID 2 series carburettor, is of the dual throat type. The adjustments are the following :

Description	Main Body	Secondary Body
Choke bore	24	26
Main metering jet	130	125
Air bleed jet	155	150
Short choke tube	3.2	3.2
Idle jet	45	40
Progression holes in main discharge tube	two dia. = 100	two dia. = 100
Float	7.3 gr.	
Spring loaded needle valve, seat	1.7	
Accelerating pump injector	45	
Econostat-delivery in secondary body	80	
Reference on starting butterfly valve control	52	

- The cylinder head and inlet manifold have been modified.

- The spark advance curve is also modified (see figure below).

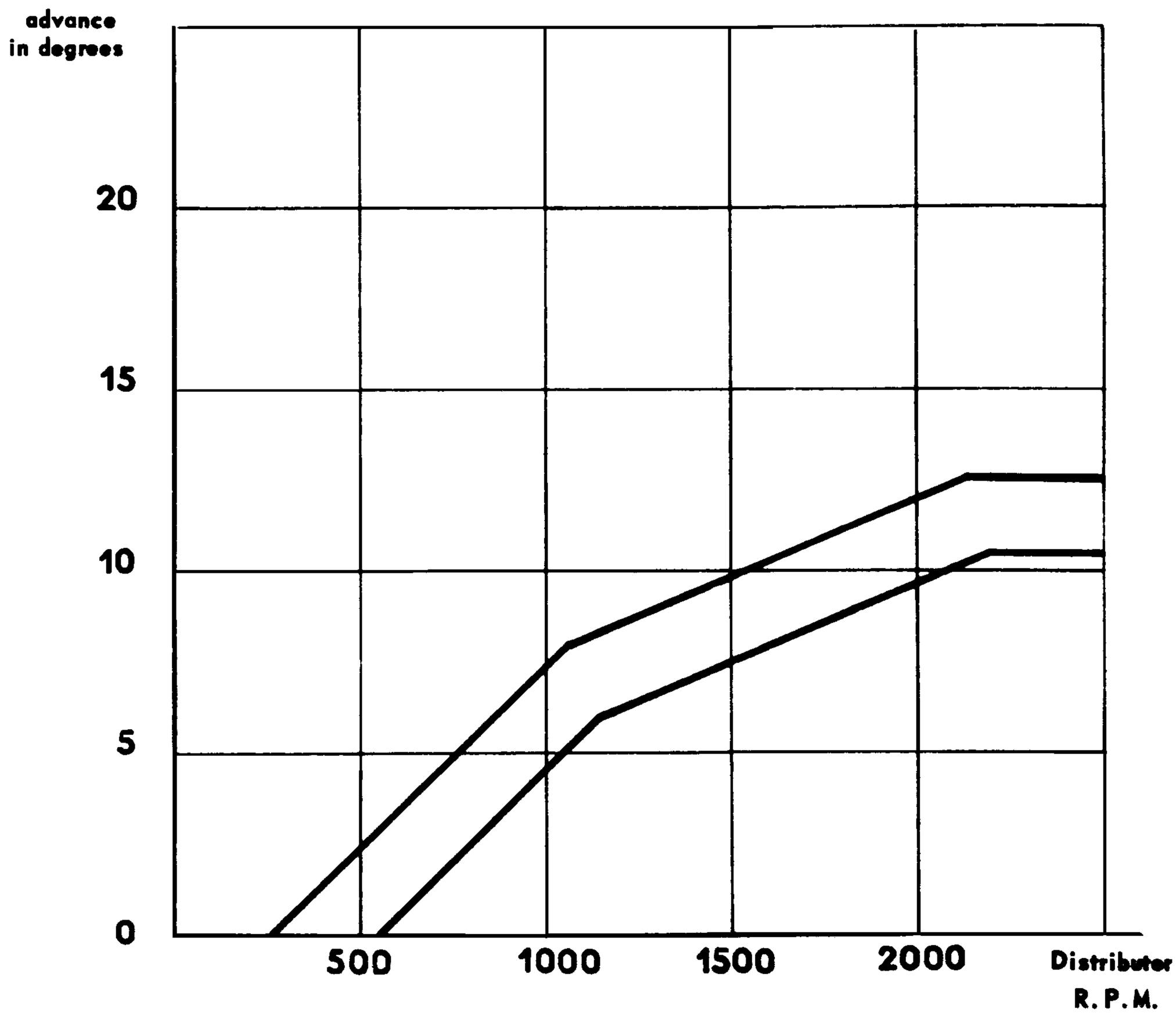

2 - GEARBOX :

The gearbox is provided with modified differential shafts and brake discs intended for the mounting of the «tripod» type drive shafts.

NOTE - The gearbox is identical to the one fitted on Breaks (Safari) turned out from September 1964 to July 1965.

3 - DRIVE SHAFTS :

The swivels have been modified.
The drive shafts are provided with «tripod» constant speed universal joints gear box end; the other end incorporates a plate including five studs onto which the wheel is fixed.

Regarding drive shaft servicing, refer to operation DX. 372-1 in Shop Manual DS 21 - N° 511.

4 - WHEELS :

The dimension of the wheels is 380, they are secured by five studs and nuts.

Tyre dimensions and inflation pressures.

- Front ..... 180 × 380 X AS 1.9 bar
- Rear ..... 155 × 380 X AS 1.9 bar
- Spare ..... 155 × 380 X AS 2.1 bar

Permissible rear mounting ..... 180 × 380 X AS 1.7 bar

5 - STEERING — AXLES :

The steering relay, steering rods and front and rear axles are new. A grease nipple is placed on each anti-roll bar bearing.

6 - BODY :

The body has been modified : the front unit is reinforced and standardized for ID and DS.

NOTE - This body is in serial production since June 1965.

THREE-HUNDRED MILES SERVICING OPERATIONS

Servicing operations to be carried out are those indicated in Technical Bulletin N° 769 (8-D).

PARTICULAR POINTS :

Par. 25 - Checking heights :

The front and rear heights remain unchanged provided that the car is fitted with 180 × 380 X AS tyres at the front and 155 × 380 X AS at the rear, e.g. :

- Front ..... 222 to 228 mm ($8\frac{7}{8}$" to $8\frac{31}{32}$")
- Rear .....335 to 345 mm ($13\frac{3}{16}$" to $13\frac{37}{64}$")

If the car in equipped with 180 × 380 X AS tyres at the rear, the rear height should be between :

355 and 365 mm (14" to $14\frac{3}{8}$").

Par. 28 Lubrication :

Lubricate the drive shafts, anti-roll bar coupling rod joints and anti-roll bar bearings.

IMPORTANT REMARK :

When eventually fitting new accessories on a car, it is strictly advisable NOT to :

1st. Place any apparatus whatsoever, and in particular horns for country use, in the engine ventilation duct. This would disturb the flow of air in the duct and might cause the engine to overheat.

2nd. Place fog lamps on the front lower trimming sheet panel, located in front of the brake ventilation ducts. Quick wear of the linings might result by excessive heating of the brake discs which in this case would not be correctly ventilated and cooled.

CITROEN CARS LIMITED,
TRADING ESTATE,
SLOUGH, BUCKS,
ENGLAND.

Technical Bulletin No. 54/D

DS 21 - DS 19 A

BREAK 21 - BREAK 19 A

Work to be carried out at the 300 mile service

The operations given below must be carried out free of charge at the 300 mile service.

The checks listed are necessary because of the initial settling down of the various parts during the early mileage of the vehicle.

The operations are given in the order in which they should be carried out to economise in time.

1 - OPERATIONS TO BE CARRIED OUT.

Mechanical:

With the engine cold:

1 - Check tyre pressures and adjust if necessary.

2 - Check all wheel nuts for tightness.

3 - Tighten the clips on the rubber water circulation hoses.

4 - Tighten cylinder head screws.

5 - Adjust the tappets.

6 - Check adjustment of the accelerator linkage.

7 - Check the tension of fan and dynamo belts.

8 - Check the tension of high pressure pump belts.

9 - Check the tension of the centrifugal regulator belt (DS).

10 - Clean the filter of the hydraulic fluid reservoir.

11 - Check the starter terminal for tightness.

Start up the engine.

12 - Check for leaks the unions on the hydraulic circuits under the bonnet. If necessary tighten the seal plate nuts and screws.

Place the vehicle on a lift and stop the engine.

13 - Check, and if necessary, retighten the fixing clips of the exhaust pipes.

Start up the engine.

14 - Check the build-up of pressure in the main accumulator.

15 - Check the heights.

16 - Check for leaks, the hydraulic circuit unions under the body.

Stop the engine.

17 - Drain the oil from the engine.

18 - Change the oil filter cartridge.

19 - Drain the gearbox.

20 - Lubricate the drive shafts, ball joints of the anti-roll bars and the anti-roll bar bearings.

Return the car to the ground.

21 - Fill up with engine oil (4 litres (7 pints) SAE 20 or SAE 10 W 30).

22 - Remove the radiator air inlet duct.

23 - Fill up the gearbox (2 litres ($3\frac{1}{2}$ pints) SAE 90 EP).

24 - Replace the radiator air inlet duct.

25 - Adjust the eccentrics of the rear brakes.

Re-start the engine.

26 - Check the working of the height control.

27 - Check, and if necessary, top up the level of the hydraulic fluid reservoir.

28 - With the engine hot, adjust the idling.

29 - Adjust the clutch drag and the fast idling.

30 - Carry out a road test. During this test, check the clutch clearance (DS) or the free travel (DS M and BREAK). Adjust the clutch re-engagement control (DS).

31 - Check operation of windscreen washer.

Electrical:

32 - Check battery level. Tighten terminals.

33 - Check regulator terminals for tightness.

34 - Check headlamps, their adjustment, working of the windscreen wipers, interior lights (panel switch and door contact) rear and stop lights, the boot lighting and its switch (DS), the direction indicators and horns.

35 - Check de-misting and air blower.

36 - Check cigar lighter for working (DS).

37 - Check dynamo output.

38 - Check functioning of the warning lights and instrument lighting.

Bodywork:

39 - Check door closing.

40 - Check the working of the windows and winders.

41 - Check the bonnet closing and the rear boot.

42 - Check the working of the telescopic stays of the rear boot (DS).

2 - CARRYING OUT THE OPERATIONS.

Important Note: The operations mentioned refer to Repair Manual No. 511 - Edition 1965 - (DS 21 and DS 21 M).

1 - Tyre Pressures (in lb/sq. in.):

	DS	BREAK Family-Commercial	AMBULANCE
Front	180 x 380 X AS :-27.5	180 x 380 X AS :-27.5	180 x 380 X AS :-27.5
Rear	155 x 380 X AS :-27.5	180 x 380 X AS :-30	180 x 380 X AS :-26
Spare Wheel	155 x 380 X AS :-30	180 x 380 X AS :-33.5	180 x 380 X AS :-30
In the case of a saloon fitted with rear tyres 180 x 380 X AS, the pressure of the rear tyres should be 25 lb/sq. in.			

2 - Tighten the wheel nuts.

Tightening torque : 35 - 43 ft/lbs. (5-6 m/kg).

4 - Tightening the cylinder head : see paragraph 21 of operation DX 112-1.

The tightening must be done with the engine cold (aluminium cylinder head).

Remove the plugs, clean and check electrode gap.

Following the order of tightening shown in the manual, proceed as follows :

DEAL WITH THE SCREWS ONE BY ONE: loosen each screw and then tighten to 43 ft/lbs (6 m/kg) (torque spanner 2471-T with flexing bar).
(The spring spanners are too large for this work).

5 - Tappet adjustment.

This adjustment must be made with the engine cold.

Adjust the tappet clearance to:

.008" (0.20 mm) for the inlet valves
and .010" (0.25 mm) for the exhaust valves.

Adjust the valves of each cylinder with the piston on T.D.C., end of compression stroke, the valves of the opposite cylinder being then in balance, that is to say, inlet valve commencing to open, exhaust valve just closing.

Adjust the valves as follows:

No. 1 cylinder : the valves on No. 4 cylinder being at point of balance.

No. 2 cylinder : the valves on No. 3 cylinder being at point of balance.

No. 3 cylinder : the valves on No. 2 cylinder being at point of balance.

No. 4 cylinder : the valves on No. 1 cylinder being at point of balance.

On the DS Model with hydraulic control, to turn the engine by hand, lock the clutch control lever in "engaged" position. This lever is situated in a recess under the instrument panel to the right of the lighting rheostat switch. Push it in towards the front and lock it by moving it upwards.

Important : Do not forget to return the clutch lever to its original position, when the adjustment is finished.

6 - Check the adjustment of the accelerator linkage.

With the accelerator pedal fully depressed, the carburettor butterfly valves should be fully opened.

(On the DS 21, place the manual clutch control in the "engaged" position). If this is carried out, the accelerator control relay can no longer be turned by hand.

Check the alignment of the carburettor spindle, the bush for the relay linkage and the re-engagement control (DS). See operation DX 314-1.

7 - Adjust the tension of the fan and dynamo belt.

See paragraphs 16 - 17, operation DX 231-0.

8 - Adjust the tension of the high pressure pump belts.

See paragraphs 12 - 13, operation DX 231-0.

9 - Adjust the tension of the centrifugal regulator belt.

See paragraphs 14 - 15, operation DX 231-0.

10 - Clean the filter of the hydraulic fluid reservoir.

Disengage the rubber pipe and its grommet from the support bracket attached to the battery top frame.

Withdraw the fluid outlet from the reservoir without disconnecting the rubber tube.

Remove the filter from the fluid outlet.

Clean the filter in alcohol, then blow compressed air over the filter from the outside.

Carry out this operation several times if necessary, as the filter must not be returned until quite clean.

Return the filter, right home in the fluid outlet, together with its ring seal.

Place the fluid outlet in the reservoir, replace the rubber tube with its grommet into the support bracket on the battery top frame.

After this operation, it is necessary to bleed the high pressure circuit : slacken the bleed screw on the pressure regulator.

Start up the engine, allow it to run a few minutes before tightening the bleed screw.

12 - 16 - Testing the hydraulic circuits for leaks.

All the unions must be fluid tight (see operation DX 00).

14 - Testing the build-up pressure in the main accumulator.

With the engine running, the manual height control in low position, and the pump no longer making pressure, slacken the bleed screw on the pressure regulator.

Screw it in gently and await the sound of cut-out. The time between closing the bleed screw and the cut-out sound must be less than 20 seconds.

15 - Checking the heights.

Place the car on a lift or over a pit. Leave the engine idling. Release the parking brake. Place chocks far enough away from the wheels to avoid hindering their movements when changing the vehicle heights.

At the front as at the rear, take the measurement of the heights from the underside of the anti-roll bar and the surface on which the wheels stand. The car being stabilised after a downward height correction. Proceed as follows:

- Raise the car to the maximum by the bumper.
- Let go of the car when its weight is too great to be held at this level (the height corrector is then in the exhaust position). At this moment, the car will descend and the height corrector will come into the inlet position, when it will again ascend. Wait for a second downward correction and the car to stabilise itself in order to measure the height. (If the second correction is not produced automatically, slightly raise the car in order to produce it).

The readings for the heights must be as follows:

- At the front between 222 and 228 mm,
- At the rear between 335 and 345 mm.

To adjust a height, front or rear, turn the clamps fixing the height corrector control rod on the anti-roll bar. Do this operation by fractions of turns. Do not move the adjusting clamp sideways.

Note - 1) At the front, measure the height on the right-hand side and on the left-hand side. There must not be a difference of more than 3 mm between these two dimensions. If there is, turn the left-hand link on the adjusting rod of the anti-roll bar.

2) The rear anti-roll bar is accessible after having removed one of the rubber plugs situated to the right of the exhaust pipe.

On the DS 21, care must be taken to measure from the anti-roll bar and not from the headlamp control flange.

3) When a saloon is fitted with rear tyres of 180 x 380 X AS, the rear height must fall between 355 and 365 mm.

17 - 18 - Draining the engine oil - Changing the oil filter element.

- See operation DX 220-3 - paragraphs 1 and 12.
- Remove the inspection plate under the sump.
- Remove the screw holding the filter and draw out the filter assembly with the lower part of the housing.
- When re-fitting, attention must be given to the order of re-assembly; it is necessary to place the parts in the following order starting from the head of the screw:

- the flat washer
- the pre-filter (gauze)
- the bowl
- the spring
- the flat washer
- the ring seal
- the filter thrust cup
- the filter element

Fit the prepared assembly on the filter.

Note: The prefilter cover must be placed so that the notch on its periphery engages with the oil suction boss (towards front of vehicle).

Before tightening the securing screw, check that the prefilter cover cannot turn. If it can, the notch is not engaged.

- Refit the inspection plate, renewing the paper joint if required.

19 - Draining the gearbox.

- Remove the level plug from the right-hand side of the box and remove the drain plug from the underside.
- After the oil has drained out, replace the drain plug, after checking the joint.

22 - 23 - 24 - Refilling the gearbox.

- Remove the radiator inlet duct (on DS 21, remove also the headlamp control cross-bar).
- The filler plug is situated in the middle of the gearbox cover. It requires about 2 litres ($3\frac{1}{2}$ pints) of SAE 90 EP oil.
- Fill with oil until it starts to escape from the level hole, then replace the filler plug and the level plug.
- Replace the radiator inlet duct.
  When refitting the headlamp control cross-bar, allow endplay of between 2 and 4 mm (see operation DX 540-0, paragraph 3).

27 - Checking the level in the hydraulic fluid reservoir.

This level should be checked with the engine running: manual height control in maximum height position (as for wheel change).

28 - 29 - Idling adjustment, clutch drag and accelerated idling.

See operation DX 142-0 and DJ 142-0.

30 - Checking the clutch clearance (DS) and the clutch free travel (DSM and ID Break).

See operation DX 142-0, paragraphs 1 and 2 for DS and operation DJ 314-0 for DSM and ID Break.

Adjusting the clutch clearance on the DS.

Fit the starting handle extension.

Loosen the adjusting screw on the clutch fork a fraction of a turn at a time, until, with the engine idling, the extension of the starting handle tends to turn but can be prevented by hand from doing so.

The clutch disc is now just in contact.

Now tighten the adjusting screw two turns to obtain correct adjustment.

Note : 1) If the clutch clearance is insufficient, it will be impossible to obtain correct re-engagement without jerks.

2) It is essential to carry out this adjustment with the engine hot. An adjustment carried out when cold may well be incorrect when hot.

Adjusting the clutch re-engagement control.

See operation DX 314-0, paragraph 5.

If the re-engagement is too rapid, unscrew the screw (anti-clockwise). If too slow, tighten the screw.

The adjusting screw cannot be moved more than one turn. When adjusting on a car, move the screw one eighth of a turn at a time.

34 - Adjusting the headlamps.

For DS 21, see operation DX 540-0.

38 - Checking the working of the tell-tale lamps.

Headlamp tell-tale light.

When headlamps are switched to main beam, the blue light should show. It should go out when the headlights are switched to dipped or sidelights.

Warning lamps for brake.

The brake warning light has two bulbs. On the DS 21, one indicates front brake pad wear. To check if operating correctly, disconnect one of the wires to the brake pads and earth it. The red lamp will light when ignition is switched on. If the pressure is insufficient in the brake accumulator, the other lamp should light up (ignition on). Check the operation of this light by making the pressure on the accumulator fall by several applications of the brake (ignition on but engine stopped). To reduce the number of brake applications, the manual height control may be placed in the low position and the bleed screw of the pressure regulator slackened.

Warning lights for direction indicators.

When the right or left-hand flashing indicators are working the warning lamp should show at the same time as the flashers.

If the warning lamp does not light when the indicators are in use, it will doubtless be due to a burnt-out bulb or a wire disconnected.

Note: In the daytime, this light will be more difficult to discern.

39 - Checking the door closing.

To check the closing of the doors, it is necessary to close the windows.

Close the doors from inside the car.

In the case of difficult closing, centralise the striking plate.

Note: To avoid wind whistle, the rear edge of front door should be from 1 - 2 mm proud of the front edge of the rear door. This adjustment can be made by moving the striker horizontally in its slots.

40 - Checking the operation of the windows and window winders.

As in the case of door closing checks, it is necessary to close the windows and work from inside the car.

Door glass sealing :

The thrust of the glass on the rubber surround is adjustable by means of screws, accessible on the edges of the doors, when the rubber plugs are lifted (the upper screws allow a slight vertical adjustment and the lower screws adjust the inclination of the guides).

41 - Checking bonnet closing.

Check for the tightness of the control cables and locks.

Check that the controls do not foul. A properly adjusted bonnet should lock in its safety catch by its own weight.

42 - Checking the boot lid stays.

These stays must work freely, without rubbing or grating.

Grease them if necessary, to do this, push the lower tube upwards and disengage it from its lower support.

Société Anonyme
ANDRÉ CITROEN
Capital : 302.460.000 Francs
117 à 167, Quai André Citroën
PARIS XV°

METHODES RÉPARATIONS

Technical Bulletin
N° 58 **D - A**

DS 21 - DS 19 a

BREAK (Safari) 21 - BREAK (Safari) 19 a

ENGINE

Oil Pump and Filter

DESCRIPTION :

The oil pump and filter assembly is a self-contained unit entirely housed in the oil sump; its lower part bathes in the engine oil.

OPERATION : (See figure over-leaf)

The pump (1) draws lubricating oil through the screen (2) and holes (a) made in the sheet metal cover (3), located deep in the sump.

The oil is next forced into the shell (b), and then through the filtering element (4), the oil then travels to all the engine lubricating points by the oil gallery C.

In order that necessary lubrication pressure may build-up, the shell (b) must be hermetically sealed. For this reason, the bottom of the shell (5) must be correctly set in place and securely held by the mounting screw (6). Refer to Shop Manual N° 511 - Operation DX.220-3)

A calibrated valve (7) permits limiting the oil pressure.

Should the filtering element (4) get foul or clogged, the by-pass shown at (8) will allow the oil to flow directly through the gallery shown at C and into the shell (b) in order not to stop engine lubrication.

Vent hole shown at (9) allows the priming of the oil pump when starting the engine after the oil sump has been drained and refilled.

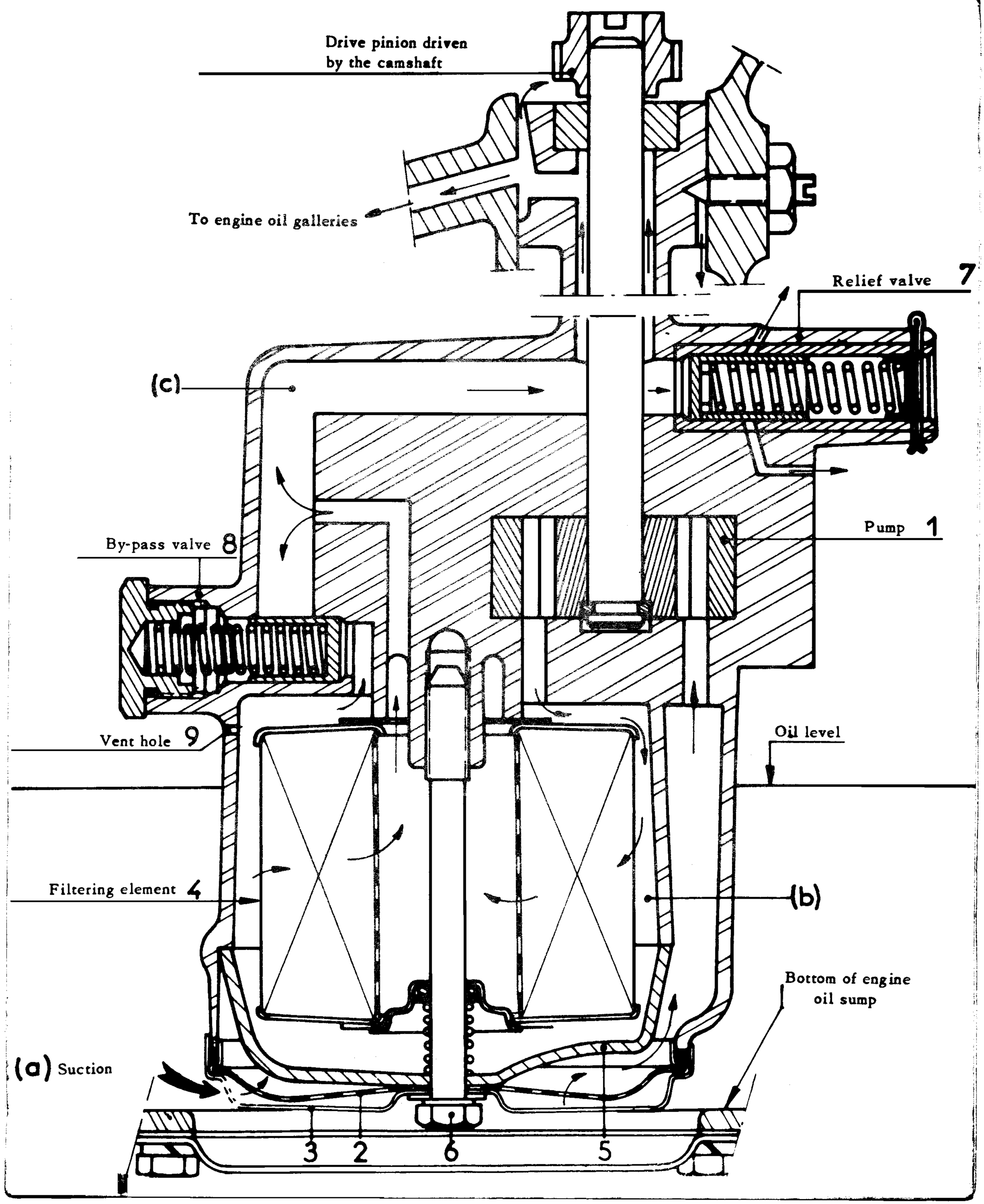
Drive pinion driven by the camshaft
To engine oil galleries
Relief valve 7
(c)
Pump 1
By-pass valve 8
Vent hole 9
Oil level
Filtering element 4
(b)
Bottom of engine oil sump
(a) Suction
3
2
6
5

Société Anonyme
ANDRÉ CITROËN
Capital : 302.460.000 Francs
117 à 167, Quai André Citroën
PARIS XVe

METHODES REPARATIONS

13 th. September 1966

TECHNICAL BULLETIN

N° 77 - D - A

I D 19

MODEL 1967

Specifications Of ID 19 Vehicles (Since September 1966).

1 - ENGINE.

(Similar to engines mounted on DS 19 a).

Bore	86 mm (3.386 inches)
Stroke	85.5 mm (3.366 inches)
Cubic capacity	1.985 litre
Compression ratio	8 - 1
Max. B.H.P.	84 h.p. SAE at 5250 r.p.m. 78 h.p. DIN at 5250 r.p.m.
Taxable H.P. (French)	11 h.p.
Max. torque	SAE - 106.4 ft.lbs. at 3,000 r.p.m. DIN - 103.4 ft.lbs. at 3,000 r.p.m.
Cooling System Capacity :	
with heater : 0° C and - 20° C (32° F and - 4° F)	8.8 Imp. qts
with heater : - 5° C (22° F)	9.3 Imp. qts.
Engine crankcase capacity :	
refill after draining	4 Imp. qts.
when filter element is changed	4 ½ Imp. qts.
Sparking plugs	Marchal 35 B
Valve clearance (engine warm)	Inlet : .008 inch Exhaust : .010 inch
Crankshaft runs in	5 main bearings W/O damper
Piston	Hollowed crown
Cylinder head	Integral inlet manifold Plain exhaust manifold
Idle or slow running	550 to 600 r.p.m.
Carburetter	34 PBIC (reference mark 90 on choke lever)

Carburetter settings.

Choke tube	26	Accelerating pump injector low type diameter	0,60
Main metering jet	135	Standard needle valve	1,7
Air bleed jet	210	Polyamid float	5,7 g
Main discharge jet	19	Starter jet	145
Low speed jet	50	Starter mobile air bleed	6
Idle air bleed	130		
Progression holes	2 ϕ 120		
Accelerating pump type	72		
Pump jet	50		

Ignition distributor.

Advance curve for SEV Marchal A 154 / DUCELLIER 4173 distributors

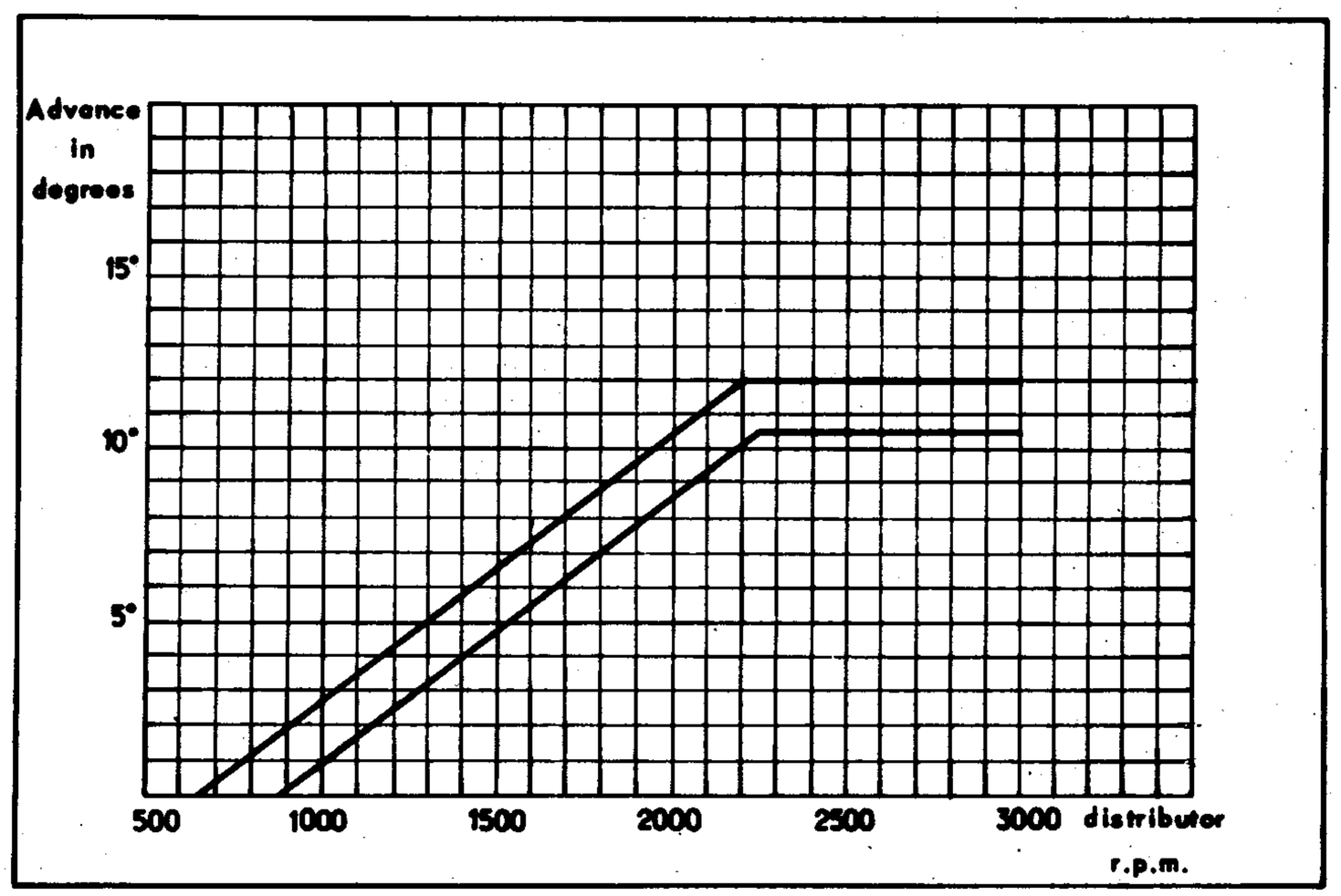

II - GEARBOX.

The gearbox is similar to the one fitted on DS 19 Ma, but the reduction ratios of the 2nd, 3rd, and 4th. speed gears have been modified.

Speed gear	Gearbox and reduction gearing ratios	Crown wheel and pinion	Final drive	Speed in Km. and miles per hour at 1,000 engine r.p.m. with 180 × 380 XAS tyres, evolution 2.07 metres.
1st.	12/39 = 0,3076		0,0703	8,7 km. (5.4 miles)
2nd.	18/33 = 0,5454		0,1246	15,5 km. (9.7 miles)
3rd.	23/27 = 0,8514	8/35	0,1946	24,2 km. (15.1 miles)
4th.	28/22 = 1,2727		0,2909	36,1 km. (22.5 miles)
Reverse	13/22 × 22/41 = 0,317		0,0724	9 km. (5.6 miles)

All models are provided with an all synchromesh forward speed gearbox.
Gearbox capacity is 2 litres (1 3/4 Imp.qts) of SAE 90 EP oil.

III - HYDRAULIC SYSTEM.

The hydraulic circuit is identical with the system fitted on previous ID 19 type cars, but the hydraulic fluid which is now used is LHM, with the exception of USA type cars which operate on LHS 2.

IMPORTANT NOTE.

The special «LHM» green colour hydraulic fluid, used in the system of this vehicle is of the mineral base type having the same nature as engine lubrication oil.

The use of any other type of fluid would completely deteriorate the entire hydraulic system.

The components suitable for this type of fluid are painted or reference marked in green, and when necessary, must be replaced only by genuine components which are also painted or reference marked in green.

IV - BRAKES.

The mounting of brakes is similar to those of the DS 19 a type cars.
The service brakes and parking brake are separate.
The parking brake callipers are placed at the rear of the brake discs.
The minimum clearance between each small plate of the parking brake ans disc should be : 0.0039 inch.

Other components, as regarding the ID 19 turned out before September 1966, have not been modified.

IMPORTANT REMARK :

When eventually fitting new accessories on a car, it is strictly advisable NOT to :

1st. Place any device whatsoever, and in particular horns for country use, in the engine ventilation duct. This would disturb the flow of air in the duct and might cause overheating of the engine.

2nd. Place fog lamps on the front lower trimming sheet panel, located in front of brake ventilation ducts. Quick wear of the linings might result by excessive heating of the brake discs which in this event would not be correctly ventilated and cooled off.

THREE - HUNDRED MILES (500 km) SERVICE

The three-hundred miles servicing operations to be carried out, regarding DS 19 a or Break (Safari) 19 a, are listed and described in Technical Bulletin 54 D - A.

Lubrication Instructions.

Refer to Technical Bulletin Nº 78 D - A.

Directors:
L. GARBE (French) Chairman
A. NOEL (French)
A. G. HARDS (British)
F. B. TANNER (British)
D. F. RAISON (French)
General Manager
Secretary:
MRS. V. L. N. PEPPERDINE

CITROEN CARS LTD.

SLOUGH, BUCKS

Telephone: SLOUGH 23811. Telegrams: CITROWORKS, SLOUGH.

Telex: 84314, CHAMCOM SLOUGH, CITROEN

Our Ref: SERVICE CIRCULAR 6605 Your Ref:

September 1966

Hydraulic Fluid DS21, DS19, ID19B
Safari 21, Safari 19, Convertible.

1. On 1967 versions of these models with hydropneumatic suspension, the Hydraulic Fluid used is of a Mineral type, is tinted green, and is known as "LHM"; this symbol applies to the Mineral Hydraulic fluid from whatever supplier it is obtained.

2. ON NO ACCOUNT MUST MINERAL LHM FLUID BE MIXED WITH THE PREVIOUSLY USED LHS2, HF, OR OTHER FLUIDS OF SYNTHETIC OR VEGETABLE ORIGIN.

3. Mineral fluids must not be used to fill or top up the hydraulic system of 1955-1966 cars, and LHS2 or other synthetic or vegetable-based fluids (e.g. HF) must not be used to fill or top up the hydraulic systems of 1967 cars.

4. If it is impossible to obtain LHM mineral fluid an SAE 10 or SAE 20 engine-oil can be used as an emergency measure but the hydraulic system must be drained and refilled with LHM as soon as possible.

5. Identification of hydraulic units and components:-
   a. units and seals with a green identification mark are for use with Mineral fluid only (LHM)
   b. Rubber parts and ring seals identified with white markings can be used with either mineral or vegetable-based or synthetic fluids (LHM or LHS2 or HF etc.)
   c. Parts and seals without identification marks, or with a red marking, must only be used with vegetable-based or synthetic fluids (HF or LHS2)

6. The 1967 models to which this change applies are identifiable by having their hydraulic units green in colour, and by having their batteries on the RH side of the radiator, instead of on the left as hitherto.

7. PLEASE ENSURE THAT ALL YOUR PERSONNEL ARE MADE AWARE OF THIS INFORMATION. FURTHER COPIES OF THIS NOTE ARE AVAILABLE ON REQUEST.

CITROEN

SERVICE CIRCULAR

Ref: 7108

To all Dealers and Service Agents

Nov. 1971

PL 92

DS21 with ELECTRONIC FUEL INJECTION

ELECTRONIC CONTROL UNIT & PRESSURE SENSOR

1) Since the introduction of the DS21 EFI, several changes have taken place on the E.C.U. and on the Pressure Sensor. Since April 1971 an Air Temperature Sensor has been fitted to the Intake Air Filter.

2) Electronic Control Units

Ref.	Citroen No.	Bosch No.	Identification	Observations
A	DX.144-906A	0.280.000.011	none	9/69 to "
B	DX.144-906A	0.280.000.011	1 yellow mark	7/70 to 12/70
C	5D5.402.234K	0.280.000.011	2 yellow marks	1/71 to 4/71
D	DX.144.906B	0.280.000.022	Potentiometer Knob	from 4/71

As replacement parts, the three items A, B and C are being succeeded by:-

E	ZC9.851.101U	0.280.000.042	Potentiometer Knob

ON NO ACCOUNT MUST THE POTENTIOMETER SETTING BE ALTERED.

3) Pressure Sensors

Ref.	Citroen No.	Bosch No.	Identification	Observations
Z	DX.144-263A	0.280.100.011	none	9/69 to 7/70 and from 4/71
Y	DX.144-263B	0.280.100.023	Black spot	7/70 to 4/71

A Pressure Sensor DX.144-119A with a green marking was fitted as a replacement part on some cars; if one has to be changed, fit a Black Spot Sensor DX.144-263B.

4) Replacement of these units

- It is essential to match the Pressure Sensor to the E.C.U. The following combinations are permissible.

ECU. Ref	"A" with	"Z" ref.	Pressure Sensor
ECU.	"B"	"Y"	Pressure Sensor
ECU.	"C"	"Y"	Pressure Sensor
ECU.	"D"	"Z"	Pressure Sensor
ECU.	"E"	"Z"	Pressure Sensor

- If a Pressure Sensor alone is to be changed on a car, the new Sensor must match the ECU on the car.
- If an "E" type ECU is used to replace a "B" or "C" type, the "Y" type Pressure Sensor must also be replaced by a "Z" type.
- The "D" type ECU must only be fitted to cars with Inlet Air Temperature Sensors and "Z" type Pressure Sensors.
- The Bosch code numbers on the ECU's identify the "D" and "E" types which both have potentiometer knobs.
- The reference letters above do not appear on the parts or in the catalogue; they only appear in this Circular to assist identification.

AUTOMOBILES

CITROËN

INFORMATION BULLETIN

N° 204 88-D

10 th December 1970

Confidential

DX-IE

DJ-IE

ENGINE

Modification of the idling circuit

To avoid clogging of the idling screw and duct by induction of the oil vapours coming from the crankcase gas recycling circuit, it is possible to modify the air-intake on the throttle housing by following note MR. 144-12 herewith.

P.T.O.

Printed in France by Citroën